Coupling piece

Typ:	A-KSG-M… (steel) A-KSG-M…-VA (stainless steel)

Application:

Coupling pieces serve as radial and axial compensation of the Piston rod of a cylinder to the fixed counterpart.
Radial / axial play: see table

General data:

material:	galvanized steel / stainless steel
tensile strenght:	600 N/mm² / 714 N/mm²
Article no.	**ZH…** (steel) **ZH…-VA** (stainless steel)

drawing:

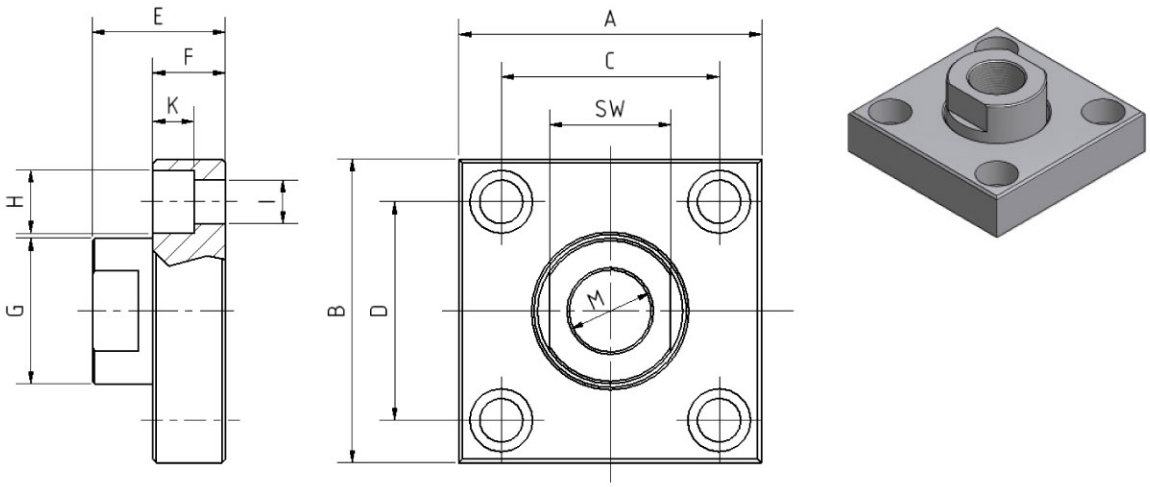

Typ	Art-Nr.	A	B	C	D	SW	E	F	G	H	I	K	M	Radial play	Axial play	kg
A-KSG-M8	ZH1202	60	37	36±0,15	23±0,15	17	24	15	20	11	6,6	7	M8	2	0,4 - 0,8	0,3
A-KSG-M10x1,25	ZH1204	60	37	36±0,15	23±0,15	17	24	15	20	11	6,6	7	M10x1,25	2	0,4 - 0,8	0,3
A-KSG-M12x1,25	ZH1205	60	56	42±0,2	38±0,2	19	30	20	25	15	9	9	M12x1,25	2	0,4 - 0,8	0,4
A-KSG-M16x1,5	ZH1206	80	80	58±0,2	58±0,2	24	32	20	30	18	11	11	M16x1,5	2	0,4 - 0,8	0,9
A-KSG-M20x1,5	ZH1207	90	90	65±0,3	65±0,3	36	35	20	40	20	14	13	M20x1,5	2	0,4 - 0,8	1,1
A-KSG-M27x2	ZH1208	90	90	65±0,3	65±0,3	36	35	20	40	20	14	13	M27x2	2	0,4 - 0,8	1,1
A-KSG-M36x2	ZH1209	125	125	90±0,3	90±0,3	50	55	30	60	26	18	17	M36x2	3	0,4 - 0,95	3,4
A-KSG-M42x2	ZH1209-250	160	160	110±0,3	110±0,3	65	70	38	77	40	26	25	M42x2	3	0,5-1,0	6,55

Konstandin GmbH Industriestr. 13-15 76307 Karlsbad- Itt.
www.konstandin-gmbh.de Tel.: 07248 / 9149-0 Fax: 07248/914949

- Technische Änderungen vorbehalten -

Coupling piece

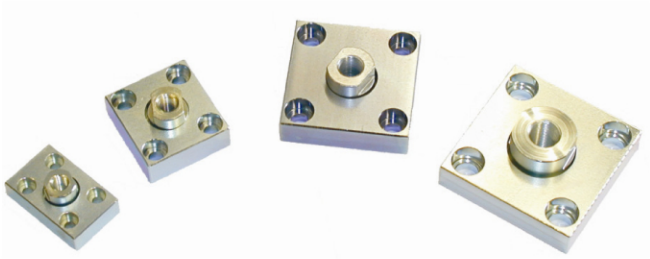

Mounting:

The female thread of the coupling piece is screwed onto the piston rod of the cylinder.
The flange piece is mounted on the corresponding counterpart using
hexagon socket screws.

Service:

All coupling piece are checked before shipment.
This inspection ensures that the goods are in perfect condition upon receipt so that they can be installed immediately.

Warranty:

Konstandin GmbH guarantees the faultless condition concerning material and fashioning of the delivered products. The warranty period and responsibility are established in legal rights.
The responsibility for resend coupling piece is explicitly limited on replacement and repair of the union or parts of it, which are definitely faulty.
Konstandin GmbH is not responsible for damaging after effects, which can result out the usage of such faulty elements. The warranty goes out in case the coupling piece has been dismounted, changed or damaged because of improper treatment.
The guarantee expires if the coupling piece is dismantled, changed or damaged by improper handling.

Konstandin GmbH Industriestr. 13-15 76307 Karlsbad- Itt.
www.konstandin-gmbh.de Tel.: 07248 / 9149-0 Fax: 07248/914949
- Technische Änderungen vorbehalten -